Kepler CMOS Camera

KL400 BI

95% Peak QE, 1.6 e- Noise RMS

The Kepler KL400 provides ultra-high sensitivity, ultra-low noise with high frame rates, all at a game-changing price to performance ratio. The back-illuminated sensor is available with TVISB coating for best performance in the visible and at 240 nm; the UV version is best at 280 nm.

KL400 with Optional Liquid Cooling Connectors

Technical Data

Sensor Type	Back Illuminated CMOS
Sensor	GPixel GSense400 BI
Shutter Type	Rolling
Active Pixels	2048 x 2048
Pixel Size (microns)	11 x 11 µm
Imaging Area (Diagonal)	22.5 X 22.5 mm (31.8 mm)
Full Well Capacity	90000 electrons
Typical Readout Noise	1.6 e-
Dynamic Range	94.6 dB
Frame Rate	24 fps (Rolling HDR)
Cooling Method[1]	Air and Liquid
Max. Cooling (Air)	45°C below ambient
Temperature Stability	0.1°C
Dark Current (typical)	0.4 eps at -20C
Interface	USB 3.0 (Optional QSFP[2])
Data Bit Depth	16 bit[3]
Optional Shutter	45 mm
Optional Mounts	Nikon or Canon
Subarray Readout	Standard
External Trigger In/Out	Standard
SDK / Software	Kepler / FLI Pilot
Weight	3 lbs (1.3 kg)

[1] Liquid circulation connectors sold separately
[2] QSFP = Quad Small Form factor Pluggable: high speed fiber optic interface. Support for KL400 in Q2 2020.
[3] 16-bit data merged from two 12 bit conversions

Absolute Quantum Efficiency

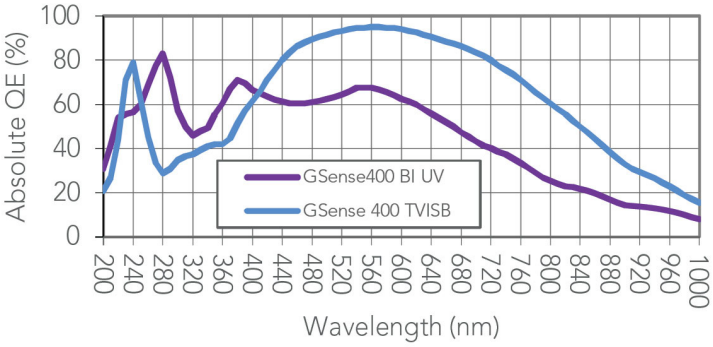

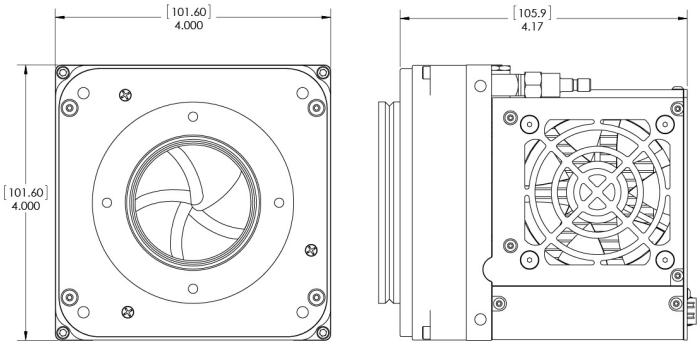

See www.flicamera.com for alternate configurations

IDEX HEALTH & SCIENCE | FLI™ Finger Lakes Instrumentation

www.flicamera.com
USA 585-624-3760