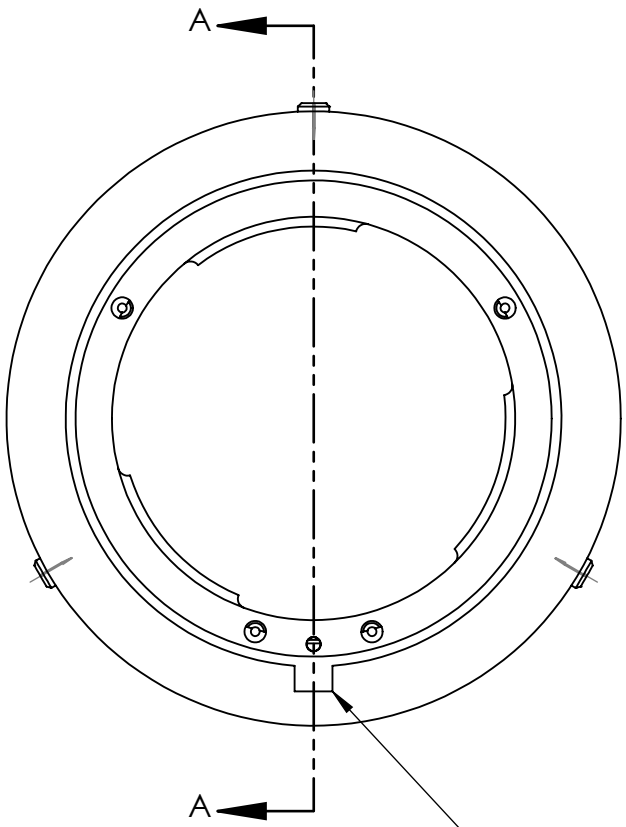


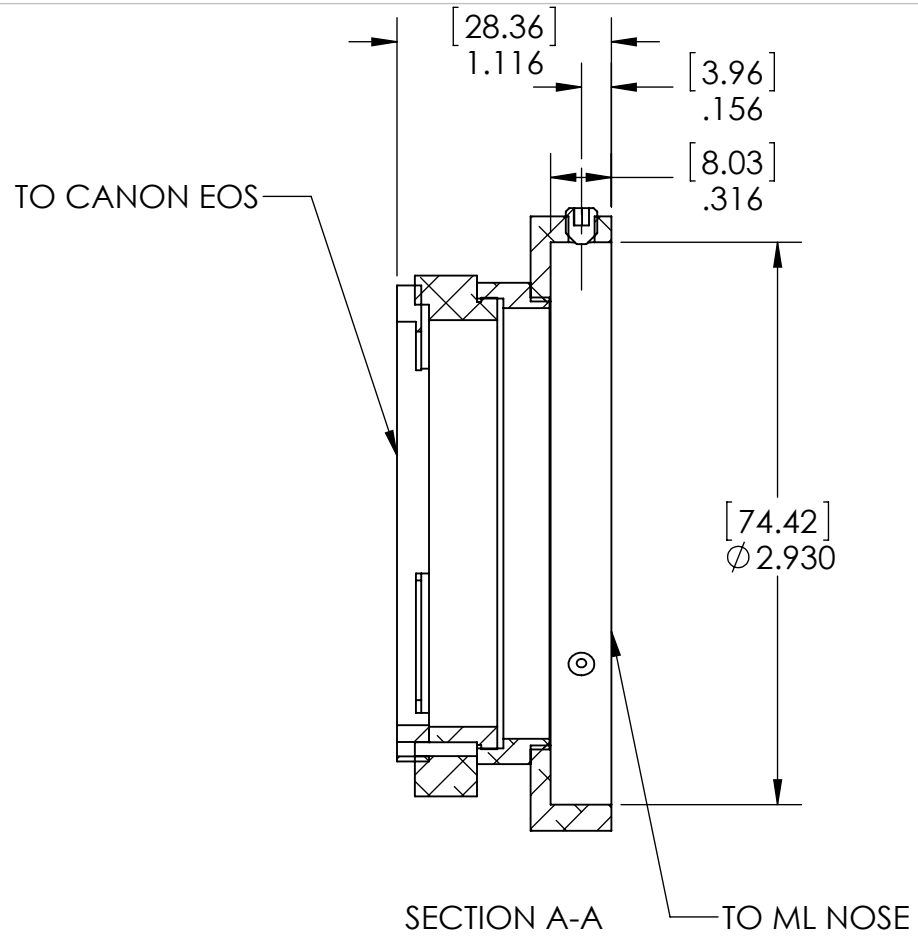


**ADPT_ EXT_TUBE_NOSE_CANONEOS_ML_AD47L**

PROPRIETARY AND CONFIDENTIAL:
THE INFORMATION CONTAINED IN THIS DRAWING IS THE SOLE PROPERTY OF FINGER LAKES INSTRUMENTATION. ANY REPRODUCTION IN PART OR AS AWHOLE WITHOUT THE WRITTEN PERMISSION OF FINGER LAKES INSTRUMENTATION IS PROHIBITED.

| | NAME | DATE | SIZE A | UNLESS OTHERWISE SPECIFIED: DIMENSIONS ARE IN INCHES TOLERANCES: ANGULAR: ±1° TWO PLACE DECIMAL ±.01 THREE PLACE DECIMAL ±.003 FOUR PLACE DECIMAL ±.0005 | REV |
|---|---|---|---|---|---|
| DRAWN | REC | 4/18/11 | MATERIAL: | | FINISH: |
| CHECKED | | | | | |
| DO NOT SCALE DRAWING | | | SCALE: 1:1 | WEIGHT: | SHEET 1 OF 1 |

5 4 3 2 1